Table of Contents

Opening Protection 2

OVERVIEW 2

Permanently Installed Systems 4

IMPACT RATED PRODUCTS 4
Windows 4
Building considerations 5
Doors 11
Entry Doors 11
Patio Doors 12
Garage Doors 13
Building considerations: 13
Skylights 16
SHUTTERS 18
General Comments 18
Common Building Considerations 18
Installation considerations 21
Roll Shutters 21
Accordion Shutters 23
Colonial Shutters 25
Bahama Shutters 26
Fabric and Screen Products 27
Door Measuring Guide 29
Window Measuring Guide 30

Temporarily Installed Products 31

STORM PANELS 31
Common Building Considerations 31
Material List 35
Installation for Direct Flush Mount – No Mounting Brackets 36
Determining Number and Size of Storm Panels 36
Installation 38
Installation for Wood - Flush Mount with "H" Header and Studded Angle Brackets 39
Determining Number and Size of Storm Panels 39
Installing Brackets 40
Installing Panels 42
Installation for Wood - Brick Façade - Flush Mount with "H" Header & Studded Angle Brackets 43
Determining Number and Size of Storm Panels 43
Installing Brackets 44
Installing Panels 46
Installation for Wood with Siding - Buildout Mount with "H" Header & Studded Angle Bracket 47
Determining Number and Size of Storm Panels 47
Installing Brackets 48
Installing Panels 50
Installation for Horizontal Mount or Buildout Mount -"H" Header & Studded Angle Bracket 51
Determining Number and Size of Storm Panels 52
Installing Brackets 52
Installing Panels 54
SCREEN AND FABRIC PRODUCTS 55
STRUCTURAL WOOD PANELS 57

Opening Protection

Overview

Several options exist for protecting the home's exterior openings (windows, doors and skylights) from windborne debris damage. Frequently these options are divided into two categories:

1. Permanently installed systems such as:

    a. Impact rated windows, doors, garage doors and skylights
    b. Shutters: Roll, both metal and fabric, Accordion, Colonial, and Bahama

2. Temporarily installed products - those that are deployed only when a storm threatens:

    a. Storm panels - aluminum, steel and polycarbonate
    b. Screen/fabric products
    c. Structural wood (plywood or OSB) panels

Ease of use and initial cost are the two most common factors in determining which product(s) will be used. Other than structural wood panels, all opening protection products must meet the requirements of the Building Code:

> Protection of openings: In wind-borne debris regions, glazing in buildings shall be impact-resistant or protected with an impact-resistant covering meeting the requirements of an approved impact-resisting standard or ASTM E1996 and ASTM E1886 referenced therein as follows:
>
> 1. Glazed openings located within 30 feet of grade shall meet the requirements of the Large Missile Test of ASTM E1996
> 2. Glazed openings located more than 30 feet above grade shall meet the provisions of the Small Missile Test of ASTM E1996

The Building Official may elect to allow the use of products tested in accordance with test standards other than ASTM E 1886 and E 1996. Some of these other standards are: SSTD-12, TAS-201 and 203 or PA 201 and 203.

Permanently installed impact resistant windows, doors and skylights generally cost more than other products (Shutter Selection Matrix Appendix G-1) and are always in place, thus requiring little to no homeowner action when a storm threatens. Roll, Accordion, Colonial and Bahama Shutters cost somewhat less than impact rated products but do require “deployment” in the event of a storm.

Temporary products such as storm panels, screen/fabric products and structural wood panels are typically the least costly. These products also require deployment when a storm threatens.

Other important factors in determining which product to use are accessibility of the opening to be protected and the capability of the homeowner to deploy the product. A second floor window, for example, may require the use of a ladder to deploy a 'temporarily installed' product. In this case and in other 'hard to reach' situations the use of a permanently installed product should be considered.

The following sections outline the installation methods and considerations for each of the identified products. Significant detail is provided for storm panel installations because these products are most commonly used for protection of openings. The other products, which are described in less detail, refer the installer, inspector and homeowners to the manufacturer's installation instructions. A representative sample of installation instructions is provided. These instructions are not intended to be used in place of the manufacturers' instructions and should by no means be considered the exact instructions for ALL of the type of product they represent.

Permanently Installed Systems

Impact Rated Products

New building codes identify specific windborne debris areas - those areas which are prone to intense winds related to hurricanes. Generally, the design windspeed in these areas is equal to or greater than 120 mph. Windows, doors or skylights installed in these areas must meet certain wind and impact test requirements to satisfy stringent hurricane provisions.

Windows

When wind speeds reach hurricane force, impact resistant windows will provide protection from flying debris that can break ordinary window panes. Impact rated windows use a combination of structural systems, anchors and impact rated glass to pass rigorous wind pressure, cyclic pressure differential and windborne debris impact tests. These impact rated windows are available in a variety of types, styles and architectural shapes. Options include, but are not limited to, casement, single-hung and picture windows. The type of window chosen will often depend on the homeowner's preferences; however, local architectural and historic building standards may be a consideration in some areas.

Choosing the correct window involves determining the Design Pressure (DP) requirements for the specific building in question. Generally, this will require the services of a qualified architect or professional engineer. Installation of impact rated windows into an existing home requires careful assessment of the existing structural opening to determine the correct methods for installing the windows. Once the desired window type, size and shape are determined, the designer must provide instructions to the contractor detailing how to prepare the opening for the new windows. Each manufacturer provides specific installation instructions. Installation instructions provided by the manufacturer may also be found within the Product Approval documents.

Building considerations

Several factors must be considered to assure windows are properly installed:

1. Type of window to be installed
    a. Aluminum, with fins or without
    b. Vinyl, with fins or without
    c. Wood
2. Egress requirements of the Building Code
3. Structure into which the anchors will be installed
    a. Wood
    b. Hollow concrete block
    c. Solid concrete block and solid concrete
4. Rough opening size
    a. Existing condition
    b. Required for new windows
5. Water intrusion protection from the interface between the window and structure
    a. Proper sealants—used as specified by manufacturer
    b. Proper flashing materials—installed correctly

Documents provided by the Fenestration Manufacturers Association (FMA) and the American Architectural Manufacturers Association (AAMA) shall be followed for all window installations. FMA/AAMA 100-07 (Standard practice for installation of window with flanges or mounting fins in wood frame construction for extreme wind/water conditions) and FMA/AAMA 200-YY (YY = Year) (Standard practice for installation of window with frontal flanges for surface barrier masonry construction for extreme wind/water conditions).

It is important that the contractor prepare the existing opening to receive and support the new windows. Correctly prepared rough openings will conform to the manufacturer's recommended clearance around the window and have the required structure to support the new window. See Figure G 1-1 for examples window installations.

Poor rough opening size vs. window size	Good rough opening and window installation
Pictures of new construction are shown for clarity	

Figure G 1-1

Gaps around the window on the left are much larger than the manufacturer recommends for proper installation**.** These gaps may allow water intrusion from wind driven rain and most assuredly will limit the structural integrity of the installation. The window shown on the right side is installed correctly and the gap is within manufacturers tolerances.

The illustrations below show typical anchoring requirements into both wood and concrete openings. These examples are provided for reference only and are not necessarily applicable to all installations. The specific installation instructions are provided by the manufacturer for each of their products.

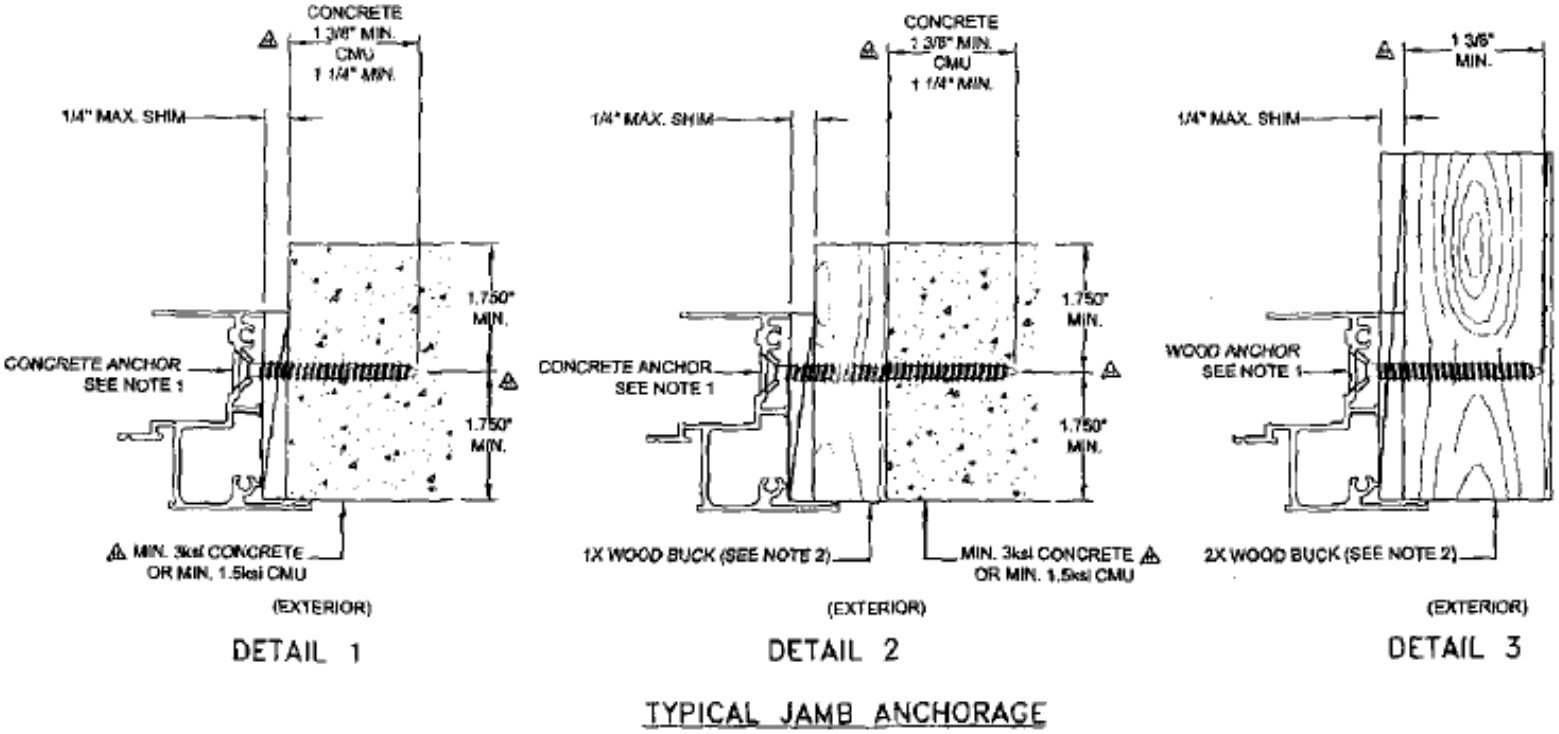

Figure G 1-2

To determine proper installation methods, the contractor and inspectors must consider how the existing opening will be modified, if required, to accommodate the new window. Most manufacturers require the rough opening to be no more than 1/4 to 3/8 of an inch larger than the window. The materials used for modifying existing openings must be capable of transferring the loads to the building structure. The number and type of fasteners used for a window installation will vary based on a number of factors such as:

1. The width of the window
2. The height of the window
3. The window frame material
4. The substrate into which the window is being anchored
5. The thickness and type of glass that is installed in the window
    a. annealed glass
    b. tempered glass
    c. laminated glass
    d. insulated glass
    e. insulated laminated glass

The manufacturer's installation instructions are critical and must be followed to assure a proper installation to not only transfer extreme wind loads, but also to assure water intrusion issues are managed properly. (If the manufacturer's installation instructions differ from information presented in this document, the manufacturer's instructions should be used.) It should be noted that under high wind loads, some leakage around the window's components may be experienced - this is not uncommon. However, with proper preparation of the existing opening and installation of the window, in accordance with the manufacturer's instructions, water intrusion at the window/wall interface can be avoided. Investigations into the cause of water intrusion problems which occurred during the 2004-2005 hurricanes reaffirmed the importance of a correctly installed window. Features of a correctly installed window include the required size, number and location of fasteners into structure, properly applied sealants and correctly installed flashing around the window. See Flashing Method Instructions located in Appendix G-2. Examples of the proper techniques for flashing of windows are shown below.

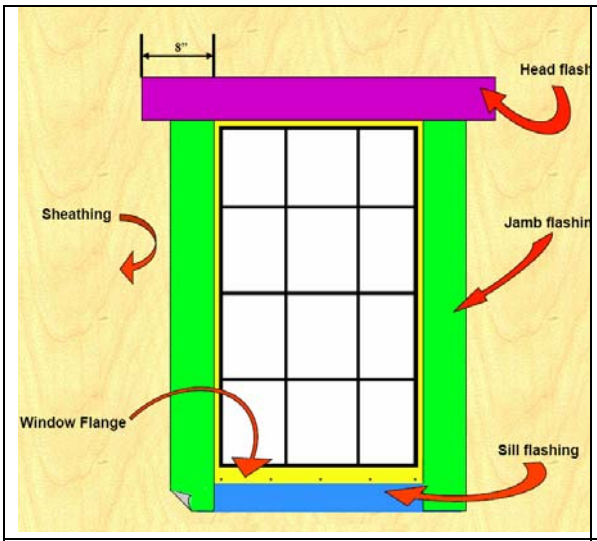

Properly flashed window

No flashing

Figure G 1-3
Window Flashing

The illustrations shown below provide some of the details included in the window manufacturer's installations instructions. A complete set of example instructions is provided in Appendix G-3.

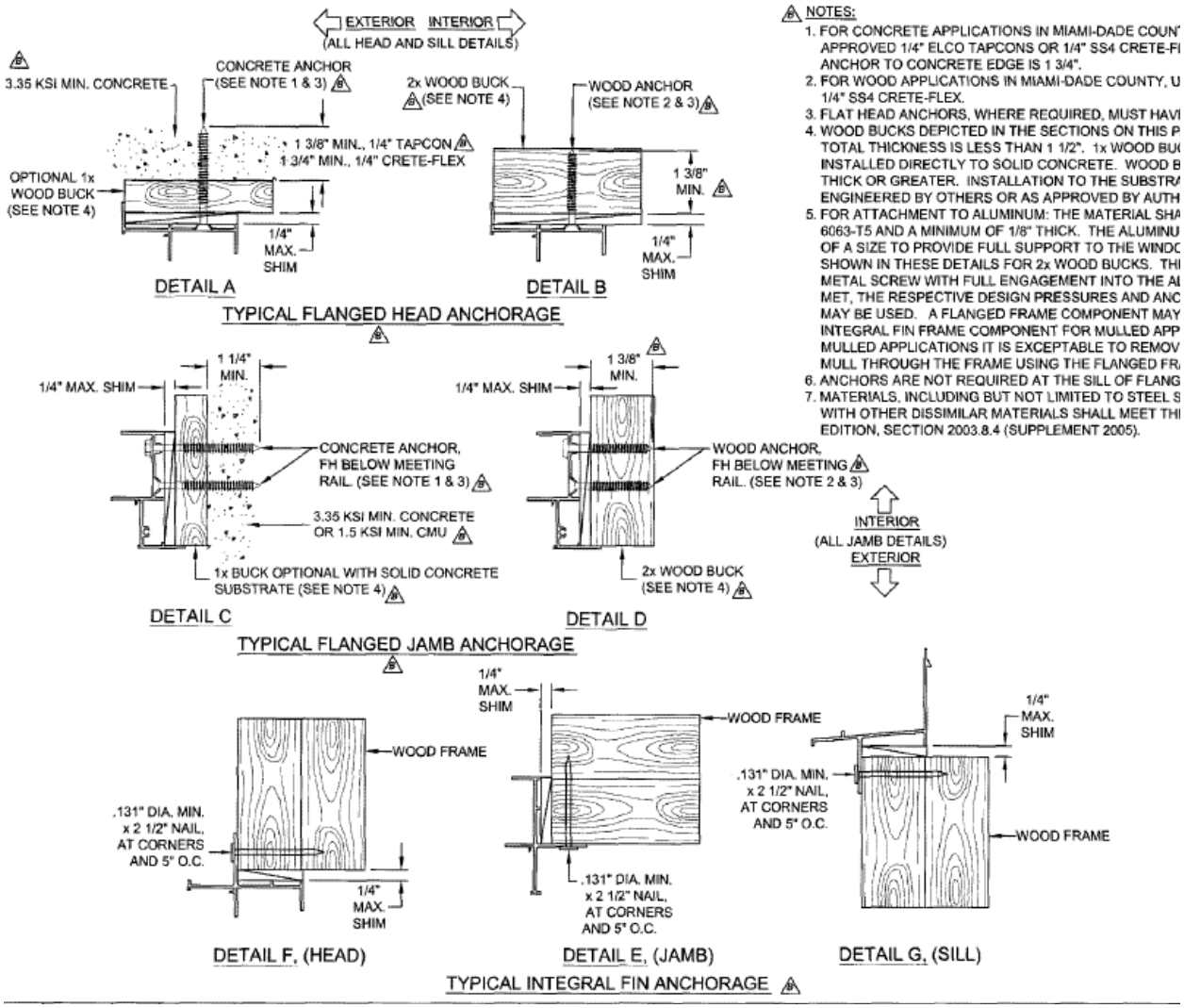

Figure G 1-4
Sample connection details

Doors

Construction and installation considerations for doors generally follow those provided above for windows. Choosing the right products is critical and as with windows, there are many different impact rated products available to choose from. The following sections provide a brief overview of each type of door system available to the homeowner.

Entry Doors

Entry doors can be damaged or forced open by wind pressure and the impact of flying debris. All doors should have a minimum of three hinges and a security lock with a dead bolt at least 1" long. The door framing should be securely anchored to the wall structure. Unless the door is relatively new or it has sticker indicating that it is rated for wind pressure and impact, it is likely that that the door is not impact rated. Doors installed in wood frames rarely provide the recommended protection from wind pressure or windborne debris. Wooden doors with raised panels are particularly vulnerable to splitting apart when they are hit by debris.

Doors that are not impact rated can be protected with a code approved wind pressure and impact rated shutter system. However, at least one door must be operable from inside the living space. This can be accomplished by using an accordion shutter system that can be operated from the inside or the outside of the house. Consideration should also be given to replacing at least one entry door with one that is code approved for wind pressure and windborne debris impact appropriate for the area. Local building officials can provide code requirements for the area.

Double entry or "French doors" have been particularly susceptible to failure from wind pressure and should have the highest priority for strengthening or shuttering. If there are glass panels in the doors or wood doors with raised panels, the least expensive option will likely be to shutter the door. If the doors are solid, at a minimum, the anchorage of the fixed door should be strengthened. This may be accomplished by adding heavy-duty barrel bolt anchors at the top and bottom of the door. The barrels should extend into the header and floor; not just the threshold and door frame.

Patio Doors

Newer sliding glass doors use tempered glass, which is significantly stronger than regular window glass. If it is tempered glass, a label indicating this will be etched in one of the corners. However, the loss of one of these doors creates a large opening for wind and water to enter, which was often seen in areas affected by the highest winds from the 2004 hurricanes. Shuttering the doors is one of the most effective ways to protect them from flying debris and should help reduce water intrusion.

If the doors open onto a porch or lanai, installing code approved impact resistant screen products around the perimeter may be the most cost effective way to protect all the openings to that area from flying debris and also reduce water intrusion around the doors. Make sure that the roof of the porch or lanai is well anchored to the floor slab or foundation.

Garage Doors

Because of their size, garage doors that do not meet the current building code for wind loads, are highly susceptible to damage from wind, including buckling and twisting off the tracks, and damage from debris impact. Failure of the garage door allows the hurricane winds to act on interior walls, doors, ceiling or roof. This frequently leads to failure of these components and can lead to significant damage including loss of the entire roof.

One of the simplest improvements that can be made is to replace the door and its tracks with a door that is code approved for wind pressure. Another solution is to use a door that is approved for both wind pressure and impact protection. Some people choose to protect the garage door with a shutter or screen product that is rated for both wind pressure and debris impact; it should be noted however that wind pressure will build up on the door behind the shutter system and the door could fail from wind pressure, even though shutters are in place.

After market vertical bracing systems alone will not bring an existing garage door up to current building code wind load requirements. They can be effective for supporting the door against wind pressure, however not all existing garage doors can simply be braced and meet current building code requirements. Permanently attached wood members are often fastened to garages for increased strength. However, consideration must be given to changing the weight distribution or balance of the door, which should be addressed by a professional installer.

Building considerations:

While similar to the window and door considerations, several additional factors are included below to assure doors are properly installed:

1. Type of the door to be installed
    a. Wind pressure rated
    b. Wind and impact rated
    c. With or without glazing
2. Structure into which the anchors will be installed
    a. Wood
    b. Hollow concrete block
    c. Solid concrete block and solid concrete
3. Rough opening size and condition
    a. Existing conditions regarding the rough opening, door bucks (where the tracks are anchored) and the header above the door to assure the structure is capable of withstanding expected wind loads.
    b. Requirements for new doors as compared to the existing conditions

4. The installation of tracks, anchoring of existing bucks as defined in the installation instructions and header considerations, especially if there is a center post that must be installed to meet the manufacturer's requirements. This is particularly important for impact rated garage doors.

Figure G 1-5
Impact Resistant Garage Door

Figure G 1-5 shows an impact resistant garage door is fitted with horizontal bracing and a large number of track brackets to anchor the tracks to the building structure. It is difficult to determine if a garage door is in fact impact rated by simply looking at it. Documentation for the garage door must be used to determine its actual rating. This documentation generally is found in the product approval information or test report provided for the door. Often doors have labels affixed to them indicating the design pressure for which they are rated. Once installation of the garage door is completed an inspection should be conducted to assure the door is properly installed.

The following guidelines are provided by the Door and Access Systems Manufacturing Association (DASMA) to guide inspectors when performing a final inspection of an installed garage door system. The inspection should identify any deviations from the manufacturer's installation instructions and the wind load design specifications (DP) for the specific door being reviewed.

Specific items to be reviewed are:

1. Proper assembly of the door and all its components

2. Proper installation of the track and track brackets with particular attention given to the anchoring of the bracket to the wall

3. Installation of the door reinforcement bars and fasteners should also be reviewed

4. Fastening of the door jambs to the building structure is critical to properly transfer wind and impact loads to the building

More detailed information is contained in DASMA Technical Bulletin Number 151 located in Appendix G-4.

Skylights

Most existing skylights on homes in South Carolina are not likely to be impact rated. Because there are no universally available shutter systems for skylights, replacement or removal of the existing unit are the only options to provide wind-borne debris protection. Some existing skylights may simply have the exterior "lens" replaced with an impact rated unit while others will require complete removal and reconstruction of the opening in the roof.

Curb prepared for installation	Skylight installed on Curb
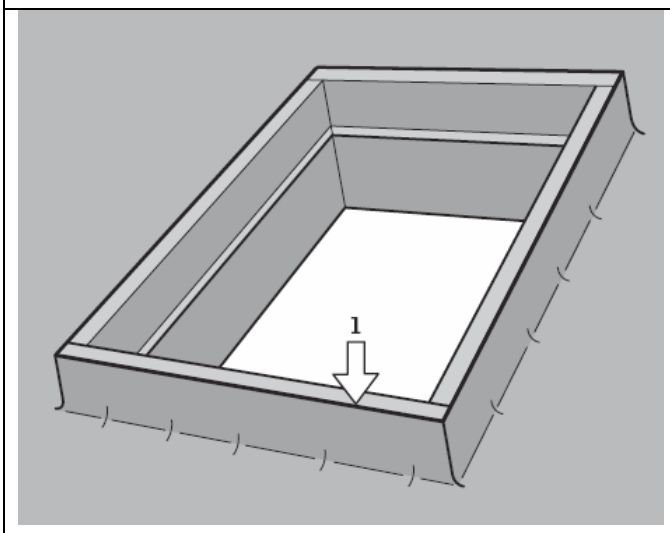	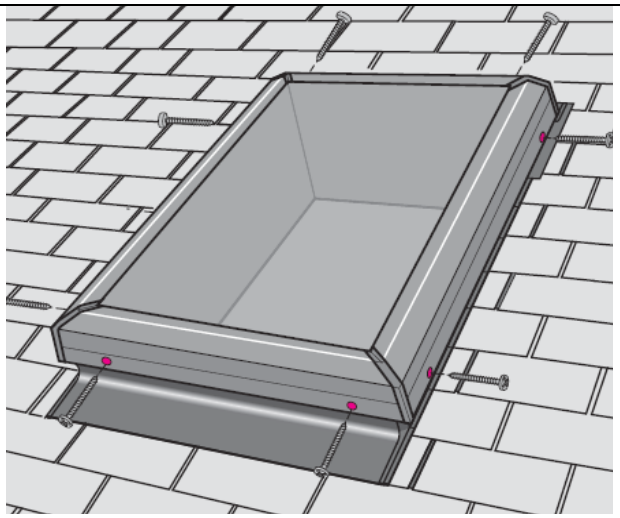

Figure G 1-6

The curb to which the skylight is fastened must be built in accordance with the installation instructions and product approval documents. Manufacturers produce impact rated skylights that contain glass that meets requirements for windborne debris protection of the IBC and the IRC. One such manufacturer is VELUX who offers a tested and approved fixed curb mounted (FCM) skylight, an insulated glass skylight designed to meet the building code requirements.

These skylights feature a design that works with many different sizes of site-built curbs and with the varying thickness of different flashing and roofing materials. They can provide energy efficiency and meet ENERGY STAR requirements. Installation in accordance with the manufacturer's installation instructions is critical to assure expected performance will be achieved during a hurricane. See Figure G 1-6

If an existing skylight is to be replaced, the homeowner should determine from the installer exactly how much of the interior finishes around and below the skylight will have to be removed or replaced. Too often, owners find out the answer to this question only after the “damage” is already done. Included in Appendix G-5 are a copy of a product approval document and the manufacturer’s installation instructions.

Shutters

General Comments

These shutters are frequently used because they are permanently installed on the house and very easy to deploy or close, prior to a storm. It should be noted that all shutters are not made the same; while most if not all the slats are aluminum, different designs incorporate different materials for rollers, hardware and other parts used in the assembly of the shutters. It is important to review the materials of construction for different shutters as there are price differences based on these factors. The use of stainless steel in place of plated steel can mean a significant difference in the life of the shutter, especially when near salt water. One very important thing to remember is proper maintenance and lubrication of the roll shutters once they are installed. If not maintained properly, they may be useless when needed because the parts have "frozen" together from corrosion and/or rust.

Common Building Considerations

A number of different construction methods are used in home construction; they include wood and metal frame, concrete block, solid concrete and Insulated Concrete Forms (ICF) and other special systems. The two most common types of construction for residential structures are wood frame and concrete block with most of South Carolina's housing stock being wood frame. The following section describes the most common construction methods and techniques employed and how they influence decisions regarding opening protection choices and options.

Openings in the building structure that are filled with windows or doors are the "openings" being referred to in this document. While in the true sense of the word, they are not "open", they are openings in the exterior walls and/or roof of the building. Understanding how the openings are constructed will help guide the homeowner and installer with the appropriate choices for installing wind-borne debris protection in or over the openings.

For installation over openings having brick or faux brick exterior wall cladding, it is imperative that the panels be fastened to the structure behind the wall cladding. Opening protection CANNOT be attached to brick or faux brick wall cladding. The mounting bolts must have at least the minimum fastener size and length to achieve the required installation strength.

The following photos show how various openings are constructed and show the potential options for anchoring shutters.

	Wood frame construction notes: • Double 2 x 4s each side of opening = 3 inches wide. • Header at top of window is 2 x 6, it could be 2 x 4, 6, 8, 10 or 12, depending on the opening width or structure above. See picture below for example. • Support under window is one 2 x 4 which provides 1 ½ inches of structure below the window. • Note the wood panel on one side of the window and insulation board on the other. There is no structure to fasten shutters to more than 3 inches from the inside of the window opening.
	Header is 2 x 8 thus provides anchoring options above the window.
	Concrete block construction notes: • Solid concrete lintel above opening and solid (poured full) cells next the opening provides good anchoring at top and on the sides.
Photos of new construction are shown to clarify points being addressed.	

Figure G2-1

Installation considerations

Fastening the shutters to the building must be done in accordance with the manufacturer's installation instructions. These instructions will vary from manufacturer to manufacturer and will depend on the specific construction materials that make up the opening and the type of opening being protected. Therefore, it is critical that the specific installation instructions are reviewed and followed for the product(s) being used.

Roll Shutters

Because the shutter must be anchored to the building structure, the actual shutter width and height will be more than that indicated by the arrows in Figure G2-1. Often, houses will have decorative shutters, light fixtures or other obstructions that have to be considered prior to installation of the shutters.

Figure G2-1shows the main shutter components that are fastened to the building. Notice that the width of the roll itself is wider than the window opening. The exact width of the shutter versus the window opening will depend on the installation requirement for the side tracks. For wood frame construction, the anchors must go into the wood framing around the window. The location of the framing will dictate placement of the tracks, thus control the width of the shutter.

For installation over openings that have brick or faux brick exterior wall cladding, it is imperative that the panels be fastened to the structure behind the wall cladding. Opening protection CANNOT be attached to brick or faux brick wall cladding. The mounting bolts must the specified size and length to assure proper anchoring into the building.

A sample product approval with installation instructions is shown in appendix G-6. (Roll shutter NOA) Pay particular attention to the requirements for anchors and the fastening into the specific structure of the home.

Figure G2-2
Roll shutter installed

Figure G2-3
Roll Shutter Closed

Accordion Shutters

Because the shutter must be anchored to the building structure, the actual shutter width and height will be more than that indicated by the arrows in Figure G2-11. As discussed in the General Comments section, accordion shutters "stack" to the side(s) of the opening and requires clearance for the shutter to expose the entire door or window opening. Often houses will have decorative shutters, light fixtures or other obstructions that have to be considered prior to installation of the shutters. This applies to all types of openings, doors, windows and garage doors.

Frequently, the "stack" must be split unevenly to accommodate field conditions and in some instances, the "stack" will be all on one side with only a latching mechanism installed on the other side. This installation "flexibility" allows installers to accommodate many different conditions. See Figure XZ

For installation over openings having brick or faux brick exterior wall cladding, it is imperative that the panels be fastened to the structure behind the wall cladding. Opening protection CANNOT be attached to brick or faux brick wall cladding. The mounting bolts must the specified size and length to assure proper anchoring into the building.

A sample product approval with installation instructions is shown in Appendix G-7. Pay particular attention to the requirements for anchors and the fastening into the specific structure of the home.

Figure G2-4
Accordion shutter installed

The shutter shown in Figure G2-4 illustrates one of the most common installations for accordion shutters: one half of the shutter width is “stacked” on each side. Figure G2-5 shows shutters with a larger percentage of the stack on the right—this is most likely a double window and the shutters can be closed and locked from the inside because the latch is in front of one of the windows, not in the middle between the windows.

Figure G2-5
Accordion Shutter Closed over window

Colonial Shutters

Colonial shutters can provide excellent hurricane protection while offering pleasing architectural designs. The shutters must be closed, from the outside or inside, and in most cases "storm bars" must be installed to enable the shutters to meet the test performance requirements of the Building Code. Shutters can be ordered in exact sizes to fit most window openings normally found on single family homes.

With colonial shutters, the anchoring takes place at the side of the opening to be protected. This is good because that is the location where building structure is most often found and makes initial installation somewhat easier than some other systems. While it is one of the higher priced shutter systems, they provide necessary hurricane protection.

Figure G2-6
Window openings protected with colonial shutters

In choosing the right shutter product, consideration must be given to the effort required when it is time to deploy the product. Colonial shutters are always in place but they do require significant effort to close and properly install the vertical or horizontal storm bars. Homeowners should be sure to read and understand the instructions provided by the manufacturer to be sure they can perform the required tasks when needed. See Appendix G-8

Figure G2-7
Close up view of colonial shutter

Bahama Shutters

Bahama shutters offer sun light protection as well as providing easy to operate hurricane protection. These shutter systems are permanently mounted to the home, thus requiring no storage. It is also one of the higher priced shutter systems, but they provide necessary hurricane protection. Bahama shutters are one of the easiest to deploy, as it requires closing the shutter and adding the anchors on each side as shown in the photo on the right below. While it may look like only the top of the shutter is anchored, bolts must be installed on each side to provide necessary wind and impact resistance. Manufacturer's installation instructions must be followed very carefully to assure proper installation.

Pictured below is a Bahama shutter in its normal open position and in its closed and "ready for the storm" position. See Appendix G-9

Figure G2-8
Installed Bahama Shutters

Fabric and Screen Products

Some of these products are installed permanently while others are installed temporarily; therefore information is included in both sections of this document.

Introduced approximately 10 years ago, fabric and screen products provide flexible systems that provide opening protection for previously difficult or impossible to protect openings. These products come as "see through" screens as shown in Figure G2-9 or vinyl coated fabric as shown if Figure WD. All these products are light weight and easy to install even on large openings. Some are better suited for larger openings where the screen is installed at the perimeter of porches or entrances. See Appendix G-10

They can be installed as single panels similar to storm shutters or as roll panels that may be manually rolled or mechanically rolled. Various manufacturers offer a wide variety of options for the homeowner to consider.

As with all products, it is very important to verify the required installation of the anchor system for these products. **It is critical that the correct anchors be installed into structure that will support the wind and impact loads experienced during a hurricane**.

Figure G2-9

Some products may be installed directly over the window or door, as shown in Figure G2-10. It should be noted that in the event of an impact, fabric and screen products installed close to the glass may allow the glass to break during a hurricane. Even if the glass breaks however, water and wind intrusion into the house will likely be limited.

These products are an alternative to rigid steel, aluminum and polycarbonate hurricane panels. These PVC coated woven fabric panels are tested to block wind, rain and storm-driven projectiles and allow light to enter the home. The panels allow for compact storage because they can be rolled up, laid flat or hung up. See Appendix G11

Figure F2-10
Vinyl coated fabric shutter

Door Measuring Guide

The measurement for the width of the opening for doors should be taken from the edge of the left side of the door to the edge of the right side of the door. The measurement for the height of doors should be taken from the edge at the top of the door to the floor as shown in Figure G2-11 below.

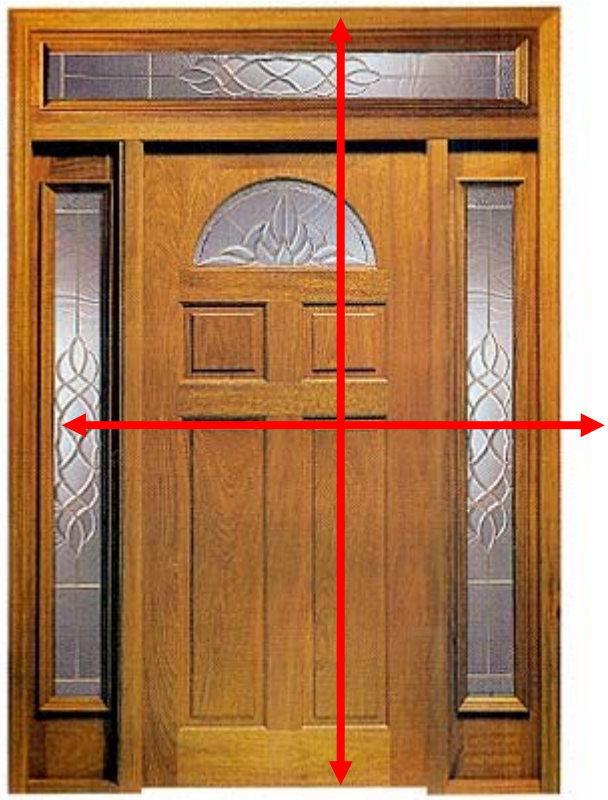

Figure G2-11
Measurement for doors

Because the shutter must be anchored to the building structure (not any part of the door frame), the actual shutter width and height will be more than that indicated by the arrows in Figure G2-11. Roll shutters extend beyond the actual opening width, thus requiring clearance for the shutter to expose the entire door or window opening. Often houses will have decorative shutters, light fixtures or other obstructions that have to be considered prior to installation of the shutters. This applies to all types of openings, doors, windows and garage doors.

Window Measuring Guide

The measurement for the width of the opening for windows should be taken from the edge of the left side of the window to the edge of the right side of the window. The measurement for the height of the window should be taken from the edge at the top of the window to the edge at the bottom of the window. (Figure G2-12.) Space for the vertical tracks and mounting options must be considered for each opening. The window shown in Figure G2-12 may not be a good candidate for roll shutters because the space between the top of the window and the bottom of the soffit is limited. However, some roll shutters are available in smaller housings. Always check impact testing and product approval documentation to assure the product is designed to perform the intended function—protect the opening from windborne debris damage.

Many accordion units will accommodate up to 1-5/8" of obstructions (trim, sills, protrusions, etc.) projecting from the wall. Anything beyond 1-5/8" will not allow the accordion to open and close.

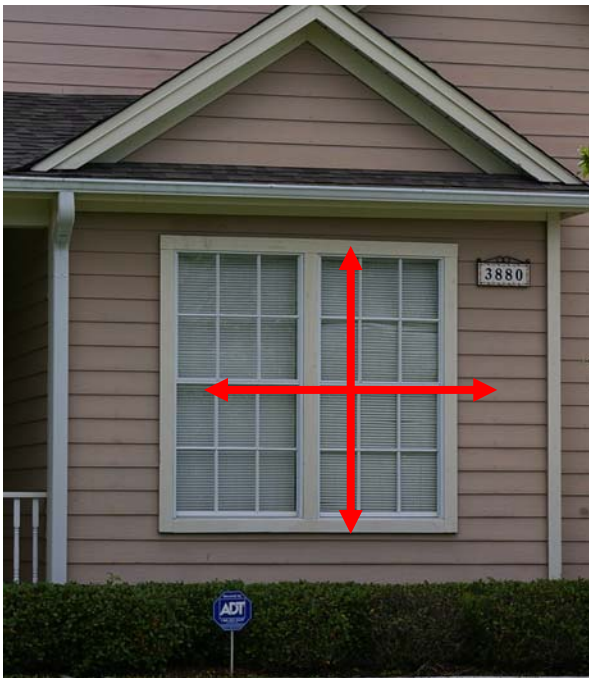

Figure G2-12
Measurement for Windows

Temporarily Installed Products

Storm Panels

Figure G3-1
Storm Panel

Common Building Considerations

Several construction methods are used in some areas. They include metal frame, solid concrete and Insulated Concrete Forms (ICF) or other special systems. The two most common types of construction for residential structures are wood frame and concrete block. Most of South Carolina's housing stock is constructed of wood. The following section describes the most common construction methods and techniques employed and how they influence decisions regarding opening protection choices and options.

Openings in the building structure that are filled with windows or doors are the "openings" being referred to in this document. While in the true sense of the word, they are not "Open", they are openings in the exterior walls and/or roof of the building. Understanding how the openings are constructed will help guide the homeowner and installer with the appropriate choices for installing windborne debris protection in or over the openings.

For installation over openings having brick or faux brick exterior wall cladding, it is imperative that the panels be fastened to the structure behind the wall cladding. Opening protection CANNOT be attached to brick or faux brick wall cladding. The mounting bolts must have a minimum 1 ½ " penetration of thread area into wood structure or a minimum 1 ¼" penetration of thread area into the concrete structure.

The following photos show how various openings are constructed and show the potential options for anchoring the windows, doors and shutter products.

	Wood frame construction notes: • Double 2 x 4s each side of opening = 3 inches wide. • Header at top of window is 2 x 6, it could be 2 x 4, 6, 8, 10 or 12, depending on the opening width or structure above. See picture below for example. • Support under window is one 2 x 4 which provides 1 ½ inches of structure below the window. • Note the wood panel on one side of the window and insulation board on the other. There is no structure to fasten shutters to more than 3 inches from the inside of the window opening.
	Header is 2 x 8 thus provides anchoring options above the window.

	Concrete Block construction notes: • Solid concrete lintel above opening and solid (poured full) cells next the opening provides good anchoring at top and on the sides.
Photos of new construction are shown to clarify points being addressed.	

Figure G3-2

Suitable anchoring can be provided by using lead or brass anchors with fasteners or "Male/Female PanelMate" anchors. While panels are most often mounted vertically, they can also be mounted horizontally. When measuring the opening for horizontally mounted panels, height becomes width and width becomes height.
You can better manage the slope of the siding by using a 1" build-out "H" header with a 1" build-out studless track. This is a special order product and is also available in 2" and 3" buildout tracks as shown in Figure G3-3**.**

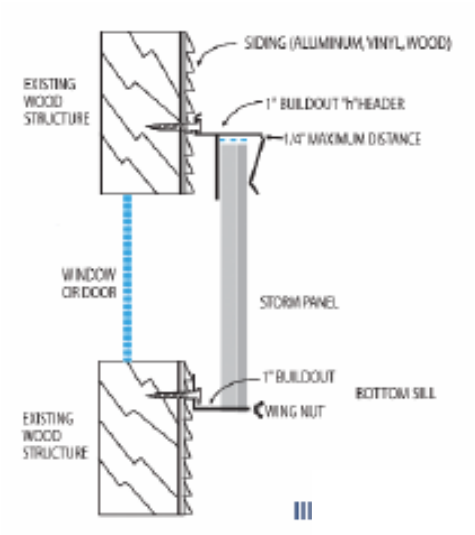

Figure G3-3

Note:Appendicies G-12 and G-13 are examples of product approvals with installation instructions from Miami-Dade County for two different manufacturers' aluminum storm panels. Appendicies G-14, G-15 and G-16 are different peoduct approvals for the exact same product from three different approval/testing organizations: International Code Council Evaluation Service (ICCES), Texas Department of Insurance (TDI) and Miami-Dade County Product Control-Notice of Acceptance (MDC-NOA)

Material List

Table G3-1

1		Aluminum Storm Panel; Galvanized Storm Panel
2	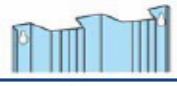	Clear Storm Panel
3		H-Header – Top Track
4		Studded Angle – Bottom Sill
5		Lagscrew – Permanent Mount in Wood
6		Concrete Screw – Permanent Mount in Concrete
7		“Male PanelMate” – Permanent Mount in Wood or Concrete
8		Lead Anchor – For Removable Mount in Concrete
9		Sidewalk Bolt – 1 ½” for Removable Mount
10		Brass Wood Bushings
11		“PanelMate” Combo Bit
12		Wingnut – Secures Panel to Sill
13		Wingnut Driver – Secures Wingnut
14	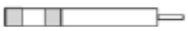	Lead Anchor Set Tool – Taps in Lead Anchor
15		5/16” Nut Driver – Secures Concrete Screw
16	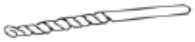	¼” Steel Drillbit – Mounting Holes in Tracks & Panels
17		3/16” Masonry Bit – Drills Hole for Concrete Screw
18		½” Combination Drillbit – Drills Hole for Lead Anchor into Concrete

Installation for Direct Flush Mount – No Mounting Brackets

Determining Number and Size of Storm Panels

- The number of panels and the length of the panels required are determined by identifying the "building structure" around the opening into which the panels will be secured. "Building structure" for wood and brick façade installations must be the wood studs, header and sill - not the plywood, siding or any other non-structural surface.
- From the outside of the house, measure the width and height of each opening to be protected. The measurements must take into consideration the location of the identified "building structure" for anchor installation. See Table G3-2 for determining the number of panels needed for each opening.
- *Panels can also be mounted horizontally. When measuring the opening for horizontally mounted panels, the opening height becomes width and the opening width becomes height or panel length.*

Figure G3-4
Horizontal installed shutters

Table G3-2
Storm Panel Coverage Table

Overall Width for Track	
Number of Panels	Width in Inches
1.0	15.00
1.5	21.25
2.0	27.50
2.5	33.75
3.0	40.00
3.5	46.25
4.0	52.50
4.5	58.75
5.0	65.00
5.5	71.25
6.0	77.50
6.5	83.75
7.0	90.00
7.5	96.25
8.0	102.50
8.5	108.75
9.0	115.00
9.5	121.25
10.0	127.50
10.5	133.75
11.0	140.00
11.5	146.25
12.0	152.50
12.5	158.75
13.0	165.00
13.5	171.25
14.0	177.50
14.5	183.75
15.0	190.00
15.5	196.25
16.0	202.50
16.5	208.75
17.0	215.00
17.5	221.25
18.0	227.50

Coverage Size	
Number of Panels	Width in Inches
1.0	14.00
1.5	20.25
2.0	26.50
2.5	32.75
3.0	39.00
3.5	45.25
4.0	51.50
4.5	57.75
5.0	64.00
5.5	70.25
6.0	76.50
6.5	82.75
7.0	89.00
7.5	95.25
8.0	101.50
8.5	107.75
9.0	114.00
9.5	120.25
10.0	126.50
10.5	132.75
11.0	139.00
11.5	145.25
12.0	151.50
12.5	157.75
13.0	164.00
13.5	170.25
14.0	176.50
14.5	182.75
15.0	189.00
15.5	195.25
16.0	201.50
16.5	207.75
17.0	214.00
17.5	220.25
18.0	226.50

Installation

- Use appropriate anchors with fastener recommended; the use of “PanelMate” fasteners is often an acceptable alternative anchoring method.
- Starting from the left side of the opening, set the first panel in place making sure that the keyholes in the panel (used for fastening the panels to the wall) are aligned with the wall’s structure located previously.
- Mark all of the holes and set the panel aside.
- Drill holes and insert anchors/fasteners.
- Secure the first panel to wall using the top and bottom left side and center anchors only. Loosely install the top and bottom right anchors and set the second panel in place overlapping the first.
- Mark the next four holes and set the panel aside.
- Drill holes and insert anchors/fasteners.
- Secure the second panel to the wall in place using the same procedure as above.
- Continue these procedures until each of the panels for the opening are installed, securing all fasteners in the last panel.

Figure G3-5
Storm panels installed vertically

Installation for Wood - Flush Mount with "H" Header and Studded Angle Brackets

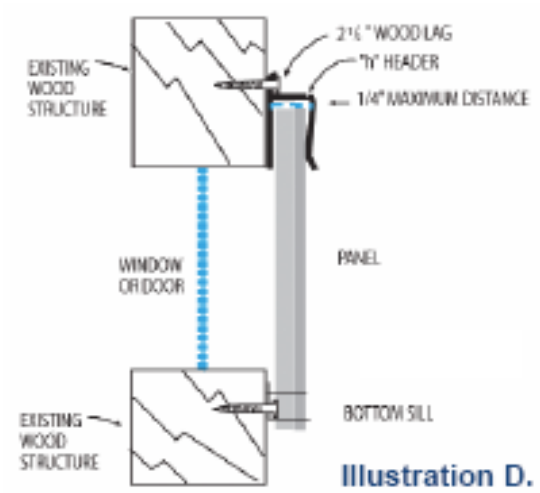

Figure G3-6

<u>Determining Number and Size of Storm Panels</u>

- The number of panels and the length of the panels required are determined by identifying the "building structure" around the opening into which the panels will be secured. "Building structure" for wood and brick façade installations must be the wood studs, header and sill - not the plywood, siding or any other non-structural surface.

- From the outside of the house, measure the width and height of each opening to be protected. The measurements must take into consideration the location of the identified "building structure" for anchor installation. See Table G3-2 for determining the number of panels needed for each opening.

- Panels can also be mounted horizontally. When measuring the opening for horizontally mounted panels, the opening height becomes width and the opening width becomes height or panel length. For panels mounted horizontally, use two studded angle mounting brackets installed vertically, one on each side of the opening.

Skelly construction co. Palm beach county fl.

Figure G3-7

Installing Brackets

Drill holes to accommodate fasteners into header and studded angle mounting brackets not more than 6” on center and within a maximum of 3” from each end.

- For Permanently Installed Brackets
  - *a. "H" Header Mounting Bracket*
    - i. Center "H" Header Mounting Bracket over the opening making sure that the fastener holes are aligned with the structure located previously.
    - ii. Mark one of the end holes - set the header mounting bracket aside.
    - iii. Drill a pilot hole for the fastener; secure the bracket to the wall.
    - iv. Level the mounting bracket, drill the remaining pilot holes and fasten.
    - v. To avoid water leaks, caulk the top of the header mounting bracket. See Figure G3-8
  - *b. Studded Angle Mounting Bracket*
    - i. Take one of the hurricane panels for this opening and slide the top into the header. Move the panel to the top of the header and while holding it in place; make a pencil mark on the wall at the bottom of the panel.
    - ii. Make a second pencil mark exactly ½” below the previous mark. Using this mark draw a level line the width of the opening. See Figure G3-9
    - iii. Center the Studded Angle Mounting Bracket on the level line below the opening.
    - iv. Mark one of the end holes - set the mounting bracket aside.
    - v. Drill a pilot hole - secure the bracket to the wall.

vi. Level the bracket, drill the remaining pilot holes and fasten the bracket to the wall.

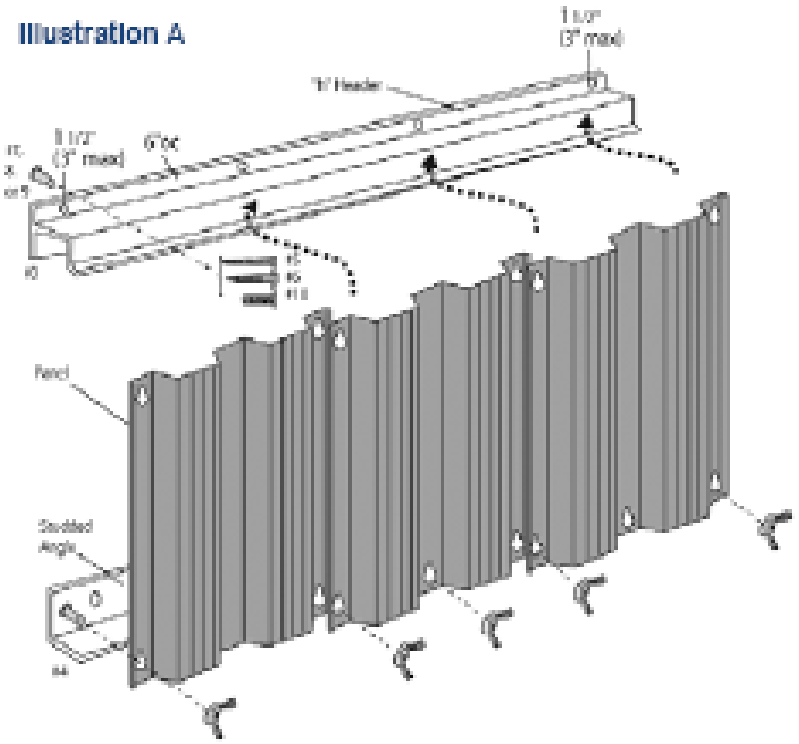

Figure G3-8

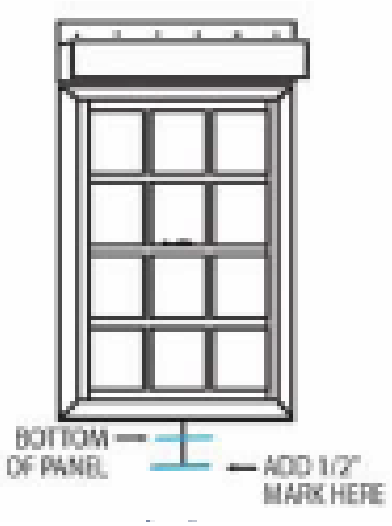

Figure G3-9

- For Temporarily Installed Brackets
  - *a. "H" Header Mounting Bracket*
    - i. Center "H" Header Mounting Bracket over the opening making sure that the fastener holes are aligned with the structure located previously.
    - ii. Level the mounting bracket; mark all of the holes - set the bracket aside.
    - iii. Drill holes to accommodate anchors/fasteners.
    - iv. Secure bracket to the wall.
  - *b. Studded Angle Mounting Bracket*
    - i. Insert one of the panels for this opening into the header mounting bracket. Move the panel to the top of the bracket and make a pencil mark on the wall at the bottom of the panel.
    - ii. Make a second pencil mark exactly ½" below this mark Using this mark, draw a level line the width of the opening.
    - iii. Center the Studded Angle Mounting Bracket on the level line below the opening.
    - iv. Mark all of the holes - set the mounting bracket aside.
    - v. Drill holes to accommodate anchors/fasteners.
    - vi. Secure the bracket to the wall.

Installing Panels

- Install panels left to right.
- Slide the top of each panel into the header and then push the bottom in over the studs.
- Install wing nuts on studs not being used by the next panel to be installed.
- Note: The maximum gap between the underside of the header and panel should be ¼".
- Complete the installation by overlapping the remaining panels and wing nuts then check to be sure all wing nuts are tightened.

Installation for Wood - Brick Façade - Flush Mount with "H" Header & Studded Angle Brackets

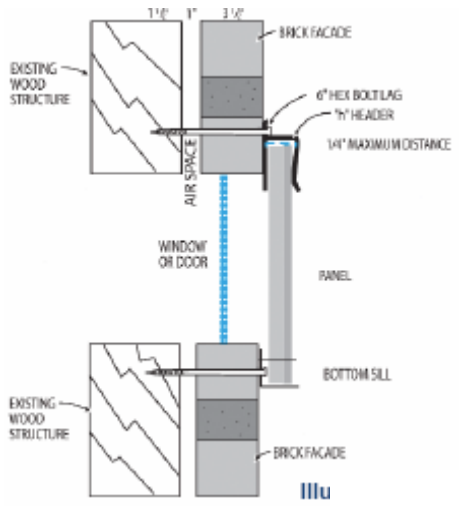

Figure G3-10

<u>Determining Number and Size of Storm Panels</u>

- The number of panels and the length of the panels required are determined by identifying the "building structure" around the opening into which the panels will be secured. "Building structure" for wood and brick façade installations must be the wood studs, header and sill - not the plywood, siding or any other non-structural surface.
- From the outside of the house, measure the width and height of each opening to be protected. The measurements must take into consideration the location of the identified "building structure" for anchor installation. See Table G3-2 for determining the number of panels needed for each opening.
- Panels can also be mounted horizontally. When measuring the opening for horizontally mounted panels, the opening height becomes width and the opening width becomes height or panel length. For panels mounted horizontally, use studded angle mounting brackets installed vertically, one on each side of the opening.

Installing Brackets

Drill holes to accommodate fasteners into header and studded angle mounting brackets not more than 6” on center and within a maximum of 3” from each end. See Figure G3-11.

- For Permanently Installed Brackets
  - *a. "H" Header Mounting Bracket*
    - *i.* Center "H" Header Mounting Bracket over the opening making sure that the fastener holes are aligned with the structure located previously.
    - *ii.* Mark one of the end holes - set the "H" Header Mounting Bracket aside.
    - *iii.* Drill a hole through the brick façade large enough to accommodate the fastener. Secure the header mounting bracket to the structure behind the brick façade.
    - *iv.* Level the mounting bracket, drill the remaining holes and fasten the bracket to the wall.
    - *v.* To avoid water leaks, caulk the top of the header mounting bracket.
  - *b. Studded Angle Mounting Bracket*
    - *i.* Insert one of the panels for this opening into the header mounting bracket. Move the panel to the top of the header and make a pencil mark on the wall at the bottom of the panel.
    - *ii.* Make a second pencil mark exactly ½” below the previous mark. Using this mark draw a level line the width of the opening. See Figure G3-12.
    - *iii.* Center the Studded Angle Mounting Bracket on the level line below the opening.
    - *iv.* Mark one of the end holes - set the mounting bracket aside.
    - *v.* Drill a hole through the brick façade large enough to accommodate the fastener. Secure the studded angle bracket to the structure behind the brick façade.
    - *vi.* Level the bracket, drill the remaining holes and fasten the bracket to the structure behind the brick façade.

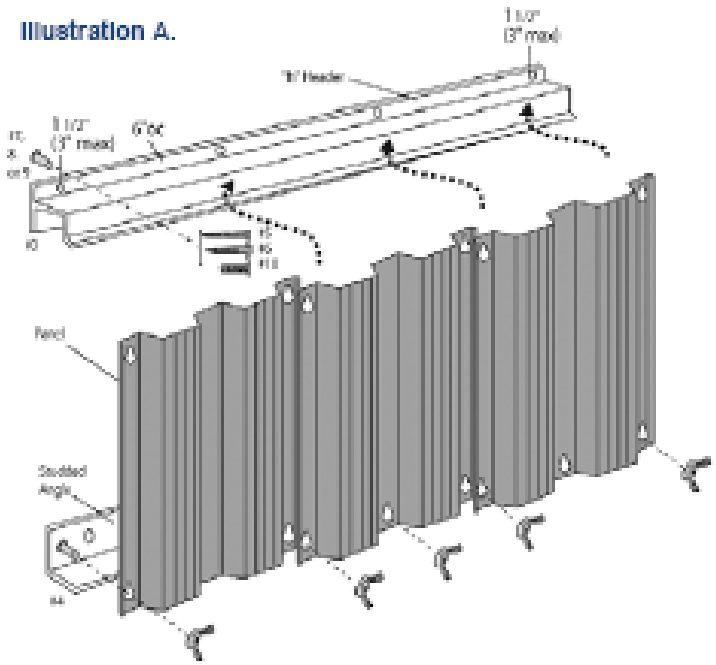

Figure G3-11

Figure G3-12

- For Temporarily Installed Brackets
  - *a. "H" Header Mounting Bracket*
    - *i.* Center "H" Header Mounting Bracket over the opening making sure that the fastener holes are aligned with the structure located previously.
    - *ii.* Level the mounting bracket; mark all of the holes - set the bracket aside.
    - *iii.* Drill holes to accommodate the anchors/fasteners.
    - *iv.* Secure bracket to structure behind the brick façade.
  - *b. Studded Angle Mounting Bracket*
    - *i.* Insert one of the panels for this opening into the header mounting bracket. Move the panel to the top of the bracket and make a pencil mark on the wall at the bottom of the panel.
    - *ii.* Make a second pencil mark exactly ½" below this mark. Using this mark, draw a level line the width of the opening. See Illustration C.
    - *iii.* Center the Studded Angle Mounting Bracket on the level line below the opening.
    - *iv.* Mark all of the holes - set the mounting bracket aside.
    - *v.* Drill holes to accommodate the anchors/fasteners.
    - *vi.* Secure bracket to structure behind the brick façade.

Installing Panels

- Install panels left to right.
- Slide the top of each panel into the header and then push the bottom in over the studs.
- Install wing nuts on studs not being used by the next panel to be installed.
- Note: The maximum gap between the underside of the header and panel should be ¼".
- Complete the installation by overlapping the remaining panels and wing nuts then check to be sure all wing nuts are tightened.

Installation for Wood with Siding - Buildout Mount with "H" Header & Studded Angle Bracket

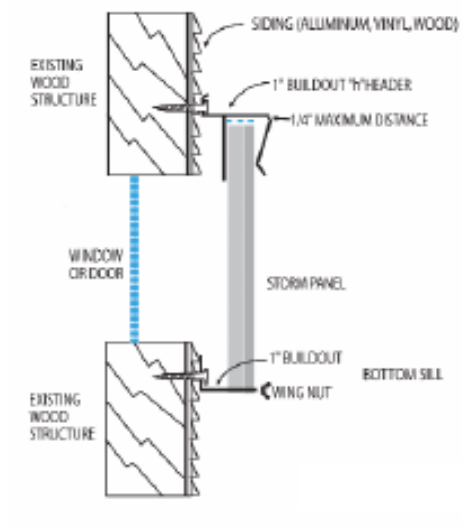

Figure G3-13

<u>Determining Number and Size of Storm Panels</u>

- The number of panels and the length of the panels required are determined by identifying the "building structure" around the opening into which the panels will be secured. "Building structure" for wood and brick façade installations must be the wood studs, header and sill - not the plywood, siding or any other non-structural surface.

- From the outside of the house, measure the width and height of each opening to be protected. The measurements must take into consideration the location of the identified "building structure" for anchor installation. See Table G3-2 for determining the number of panels needed for each opening.

- Panels can also be mounted horizontally. When measuring the opening for horizontally mounted panels, the opening height becomes width and the opening width becomes height or panel length.

Installing Brackets

Drill holes to accommodate the fasteners into header and studded angle mounting brackets not more than 6” on center and within a maximum of 3” from each end. See Figure G3-14

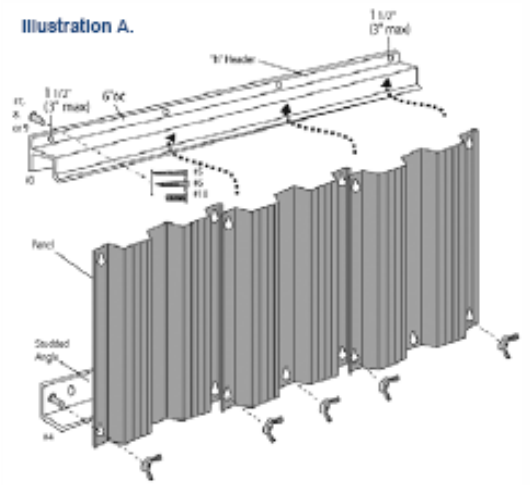

Figure G3-14

- For Permanently installed brackets
  - *a. "H" Header Mounting Bracket*
    - *i.* Center "H" Header Mounting Bracket over the opening making sure that the fastener holes are aligned with the structure located previously.
    - *ii.* Mark one of the end holes - set the "H" Header Mounting Bracket aside.
    - *iii.* Drill a pilot hole for the fastener; secure the bracket to the wall with a lag bolt.
    - *iv.* Level the mounting bracket, drill the remaining pilot holes and fasten with lag bolts.
    - *v.* To avoid water leaks, caulk the top of the header mounting bracket.
  - *b. Studded Angle Mounting Bracket*
    - *i.* Take one of the panels for this opening and slide the top into the header mounting bracket. Move the panel to the top of the header and while holding it in place and make a pencil mark on the wall at the bottom of the panel.

ii. Make a second pencil mark exactly ½" below the previous mark. Using this mark draw a level line the width of the opening. See Figure G3-15**.**

iii. Center the Studded Angle Mounting Bracket on the level line below the opening.

iv. Mark one of the end holes - set the mounting bracket aside.

v. Drill a pilot hole - secure the bracket to the wall with a lag bolt.

vi. Level the bracket, drill the remaining pilot holes and fasten the bracket to the wall with lag bolts.

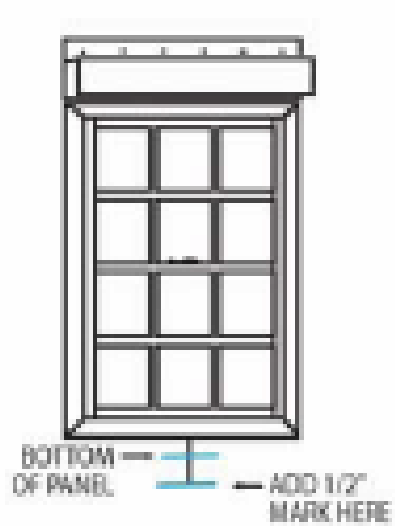

Figure G3-15

- <u>For Temporarily Installed Brackets</u>
  - *a. "H" Header Mounting Bracket*
    - *i.* Center "H" Header Mounting Bracket over the opening making sure that the fastener holes are aligned with the structure located previously.
    - *ii.* Level the mounting bracket; mark all of the holes - set the bracket aside.
    - *iii.* Drill holes to accommodate the anchors/fasteners.
    - *iv.* Secure bracket to wall.

b. Studded Angle Mounting Bracket

i. Insert one of the panels for this opening into the header mounting bracket. Move the panel to the top of the bracket and make a pencil mark on the wall at the bottom of the panel.

ii. Make a second pencil mark exactly ½" below the previous mark Using this mark draw a level line the width of the opening. See Figure G3-15.

iii. Center the Studded Angle Mounting Bracket on the level line below the opening.

iv. Mark all of the holes - set the mounting bracket aside.

v. Drill holes to accommodate the anchors/fasteners.

vi. Secure the mounting bracket to the wall.

<u>Installing Panels</u>

- Install panels left to right.
- Slide the top of each panel into the header and then push the bottom in over the studs.
- Install wing nuts on studs not being used by the next panel to be installed.
- Note: The maximum gap between the underside of the header and panel should be ¼".
- Complete the installation by overlapping the remaining panels and wing nuts then check to be sure all wing nuts are tightened.

Installation for Horizontal Mount or Buildout Mount -"H" Header & Studded Angle Bracket

Windowsills, doorsteps, expansive trim and other obstructions may prevent a flush mount installation. In most cases, the most cost-effective method to address this problem is to employ a horizontal mount installation. In this case, the "H" header bracket is eliminated and two studded angle brackets are used. They are installed on each side of the window, allowing panels to be installed horizontally. Due to appearance concerns, it is recommended that these tracks be made removable. This is accomplished by using lead or brass anchors with fasteners. "Male PanelMate" is an alternative anchoring method. Fasteners are to be a minimum of 3" from edge/side of window. See Figure G3-16.

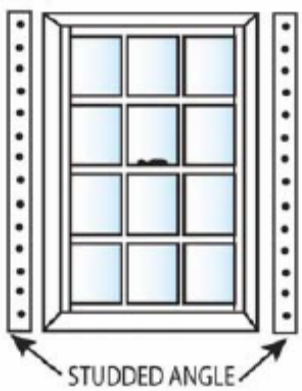

Figure G3-16

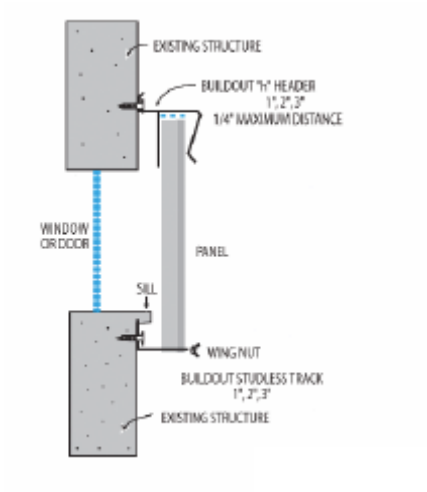

Figure G3-17

Installation on some obstructions can be addressed by the use of buildout tracks. These tracks are also needed where building codes require a minimum separation between the glass and the storm panel. Buildout "H" header mounting brackets and studless mounting brackets are available in 1", 2" and 3" sizes. See Figure G3-17.

Installation for Concrete or Concrete Block and Stucco (CBS) Construction - Flush Mount with "H" Header and Studded Angle Brackets

Determining Number and Size of Storm Panels

- The number of panels and the length of the panels required are determined by identifying the "building structure" around the opening into which the panels will be secured.
- From the outside of the house, measure the width and height of each opening to be protected. The measurements must take into consideration the location of the identified "building structure" for anchor installation. See Table G3-2 for determining the number of panels needed for each opening.
- Panels can also be mounted horizontally. When measuring the opening for horizontally mounted panels, the opening height becomes width and the opening width becomes height or panel length.

Installing Brackets

Drill holes to accommodate fasteners into header and studded angle mounting brackets not more than 6" on center and within a maximum of 3" from each end. See Figure G3-18.

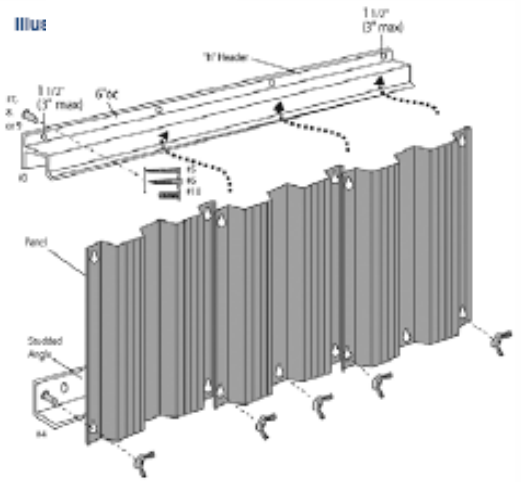

Figure G3-18

"H" Header Mounting Bracket

- Center "H" Header Mounting Bracket over the opening making sure that the fastener holes are aligned with the structure located previously.
- Level the mounting bracket, mark all of the holes - set the header mounting bracket aside.
- Drill holes to accommodate the anchors/fasteners.
- Secure the mounting bracket to the wall.
- To avoid water leaks, caulk the top of the header mounting bracket.

Studded Angle Mounting Bracket

- Insert one of the panels for this opening into the header mounting bracket. Move the panel to the top of the header and make a pencil mark on the wall at the bottom of the panel.
- Make a second pencil mark exactly ½" below the previous mark. Using this mark draw a level line the width of the opening. See Figure G3-19.
- Center the Studded Angle Mounting Bracket on the level line below the opening.
- Mark all of the holes - set the mounting bracket aside.
- Drill holes to accommodate the anchors/fasteners.
- Secure the mounting bracket to the wall.

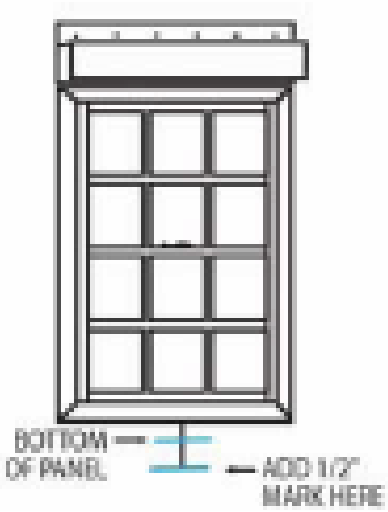

Figure G3-19

Installing Panels

- Install panels left to right.
- Slide the top of each panel into the header and then push the bottom in over the studs.
- Install wing nuts on studs not being used by the next panel to be installed.
- Note: The maximum gap between the underside of the header and panel should be ¼”.
- Complete the installation by overlapping the remaining panels and wing nuts then check to be sure all wing nuts are tightened.

Screen and Fabric Products

Some of these products are installed permanently while others are installed temporarily; therefore information is included in both sections of this document.

Introduced approximately 10 years ago, fabric and screen products provide flexible systems that provide opening protection for previously difficult or impossible to protect openings. These products come as "see through" screens as shown in Figure G4-1 or vinyl coated fabric as shown if Figure G4-2. All these products are light weight and easy to install even on large openings. Some are better suited for larger openings such as the ones shown in Figure G4-1 where the screen is installed at the perimeter of porches or entrances. See Appendix G-10

They can be installed as single panels similar to storm shutters or as roll panels that may be manually rolled or mechanically rolled. Various manufacturers offer a wide variety of options for the homeowner to consider.

As with all products, it is very important to verify the required installation of the anchor system for these products. **It is critical that the correct anchors be installed into structure that will support the wind and impact loads experienced during a hurricane**.

Figure G4-1

Some products may be installed directly over the window or door, as shown in Figure G4-2. It should be noted that in the event of an impact, fabric and screen products installed close to the glass may allow the glass to break during a hurricane. Even if the glass breaks however, water and wind intrusion into the house will likely be limited. See Appendix G-11

These products are an alternative to rigid steel, aluminum and polycarbonate hurricane panels. These PVC coated woven fabric panels are tested to block wind, rain and storm-driven projectiles and allow light to enter the home. The panels allow for compact storage because they can be rolled up, laid flat or hung up.

Figure G4-2

Structural Wood Panels

The Building Code requirements for Opening Protection (shown in the Overview section of Opening Protection) provides an "exception" to the Code language with regards to using wood structural panels (Plywood or Oriented Strand Board—OSB). This "Exception" means that the use of wood structural panels is allowed, with some restrictions as outlined in the Code language, for opening protection. While allowed by the South Carolina Building Code, the South Carolina Safe Home Program does not encourage their use and they are not subject to grants unless they are designed and installed by a contractor who uses the instruction information contained in this section.

Building Code language:

Exception:

1. Wood structural panels with a minimum product with the glazed opening. Panels shall be secured with the attachment hardware provided. Attachments shall be designed to resist the component and cladding loads determined in accordance with the provisions of ASCE 7. Attachment in accordance with Table 1609.1.2 is permitted for buildings with a mean roof height of 33 feet (10.058 mm) or less where wind speeds do not exceed 130 mph (57.2 m/s).

TABLE 1609.1.2
WIND-BORNE DEBRIS PROTECTION FASTENING SCHEDULE FOR WOOD STRUCTURAL PANELS[a,b,c,d]

FASTENER TYPE	FASTENER SPACING (inches)		
	Panel Span ≤ 4 feet	4 feet < Panel Span ≤ 6 feet	6 feet < Panel Span ≤ 8 feet
No. 6 screws	16	12	9
No. 8 screws	16	16	12

For SI: 1 inch = 25.4 mm, 1 foot = 304.8 mm, 1 pound = 4.4 N, 1 mile per hour = 0.44 m/s.

a. This table is based on a maximum wind speed (3-second gust) of 130 mph and mean roof height of 33 feet or less.

b. Fasteners shall be installed at opposing ends of the wood structural panel. Fasteners shall be located a minimum of 1 inch from the edge of the panel.

c. Fasteners shall be long enough to penetrate through the exterior wall covering a minimum of 1.75 inches into wood wall framing; a minimum of 1.25 inches into concrete block or concrete; or into steel framing by at least three threads. Fasteners shall be located a minimum of 2.5 inches from the edge of concrete block or concrete.

d. Where screws are attached to masonry or masonry/stucco, they shall be attached utilizing vibration-resistant anchors having a minimum withdrawal capacity of 490 pounds.

Additional guidance on the construction of wood "Hurricane Shutter Designs" is provided by APA (the Engineered Wood Association). A copy of their brochure is included in Appendix G-17.